Edited with the trial version of
FlexiPDF
To remove this notice, visit
www.flexipdf.com

WR450F, 2004 Europe, modified electric wiring diagram, might fit for some later models as well

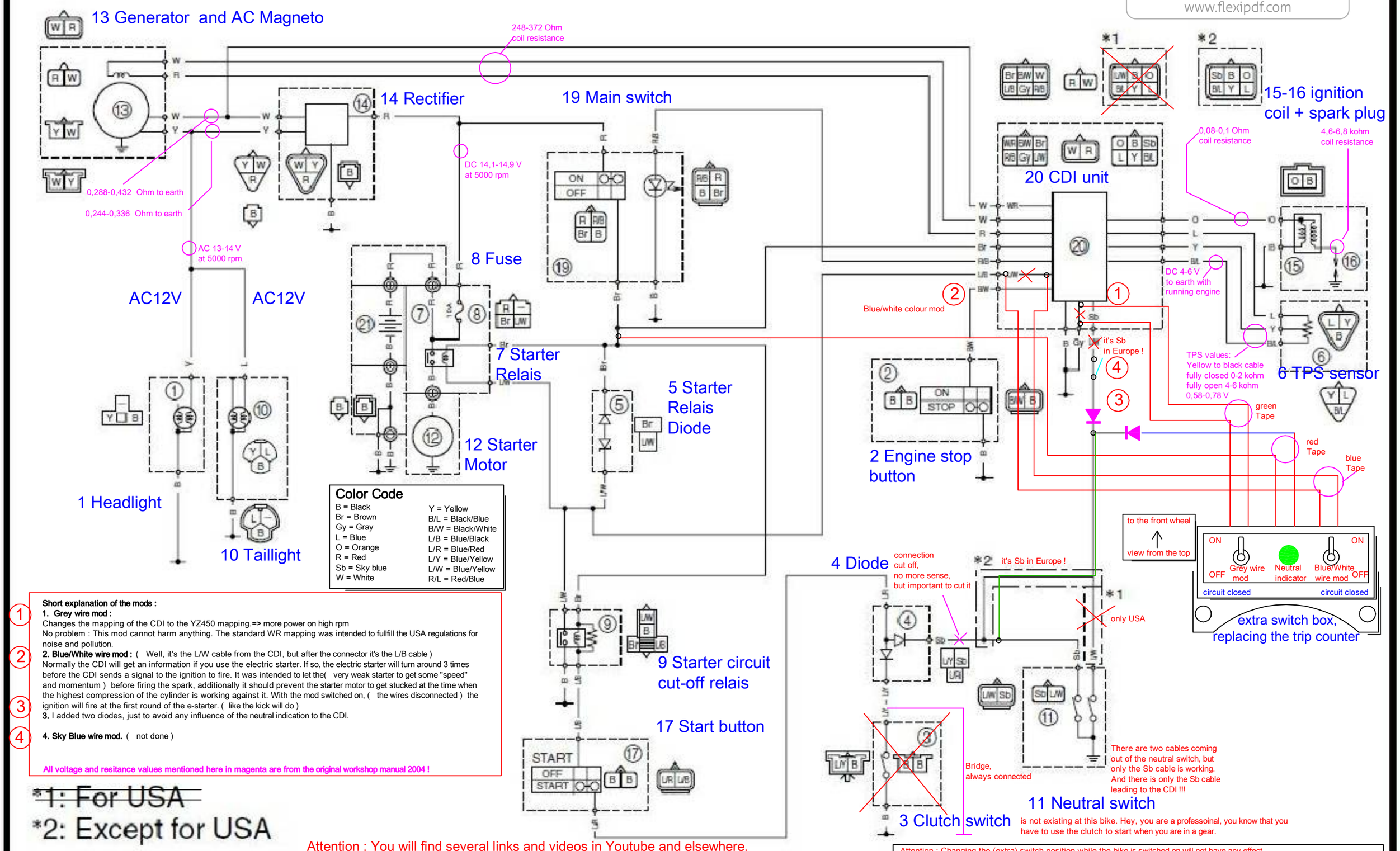

Color Code

B = Black	Y = Yellow
Br = Brown	B/L = Black/Blue
Gy = Gray	B/W = Black/White
L = Blue	L/B = Blue/Black
O = Orange	L/R = Blue/Red
R = Red	L/Y = Blue/Yellow
Sb = Sky blue	L/W = Blue/Yellow
W = White	R/L = Red/Blue

Short explanation of the mods :

1 **1. Grey wire mod :**
Changes the mapping of the CDI to the YZ450 mapping.=> more power on high rpm
No problem : This mod cannot harm anything. The standard WR mapping was intended to fullfill the USA regulations for noise and pollution.

2 **2. Blue/White wire mod :** (Well, it's the L/W cable from the CDI, but after the connector it's the L/B cable)
Normally the CDI will get an information if you use the electric starter. If so, the electric starter will turn around 3 times before the CDI sends a signal to the ignition to fire. It was intended to let the(very weak starter to get some "speed" and momentum) before firing the spark, additionally it should prevent the starter motor to get stucked at the time when the highest compression of the cylinder is working against it. With the mod switched on, (the wires disconnected) the ignition will fire at the first round of the e-starter. (like the kick will do)

3 **3.** I added two diodes, just to avoid any influence of the neutral indication to the CDI.

4 **4. Sky Blue wire mod.** (not done)

All voltage and resitance values mentioned here in magenta are from the original workshop manual 2004 !

~~*1: For USA~~

*2: Except for USA

Copyright 2010 by Godenta

Attention : You will find several links and videos in Youtube and elsewhere.
Often it's not clear what they describe, the skyblue wire mod or the blue/white wire mod.
There's a big difference. Please take care of it !

Attention : Changing the (extra) switch position while the bike is switched on will not have any effect.
Switch the engine off, Change the position of the additionally switches, and after restarting the bike you will maybe see an effect.